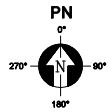

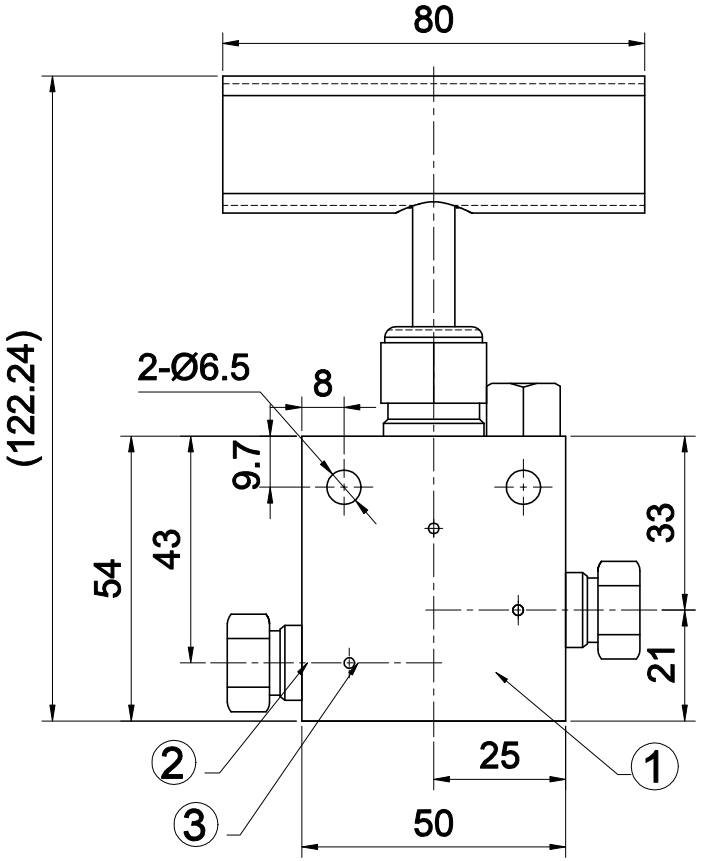

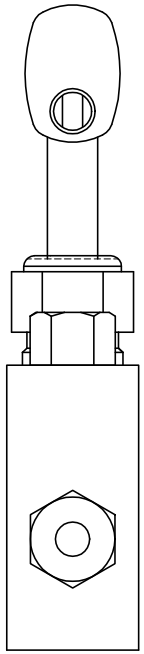

– SPECIFICATIONS

Catalog No.	Pressure Rating(PSI)	Port type	Orifice Size(∅)	Material
NV60VS04-S	60,000	H6004	2	STS316CW

– Note

1. All dimensions for reference only and subject to change.

Website		Main site : http://www.hiflux.com Shopping mall : http://www.hifluxmall.com					
3	COLLAR	60,000PSI 1/4"	FA60RS04	STS316CW	2	EA	-
2	GLAND	60,000PSI 1/4"	FA60GS04	STS316CW	2	EA	-
1	NEEDLE VALVE	60,000PSI 1/4"	NV60VS04-S	-	1	EA	-
ITEM	NAME OF PART	SPEC	Catalog No.	MATERIAL	QUANTITY	UNIT	REMARK
PART CODE		DESCRIPTION			FOR ONE SET		
MATERIAL LIST FOR ONE SET							

No indication chamfer 0.2~0.4 X 45°

UNIT: MM

General tolerance is given in KS B ISO 2768-1

NORMINAL DIM.(MM)		
OVER	UNDER	TOL.
0.5	6	±0.1
6	30	±0.2
30	120	±0.3
120	315	±0.5
315	1000	±0.8
1000	2000	±1.2
OVER 2000		±1.5

CLASS OF FINISH

- ▽ = 50/, 200S,
- W = 12.5/, 50S,
- X = 3.2/, 12.5S,
- Y = 0.8/, 3.2S,
- Z = 0.2/, 0.8S,

PROJECT: HIGH PRESSURE NEEDLE VALVE

TITLE: NEEDLE VALVE STRAIGHT

60,000PSIG 1/4"

APPD BY	CHKD BY	DED BY	DRN BY	WORK NO.	REV. NO.
	K.Y.J	K.Y.J	K.Y.J	HI-KYJ-211103-04	1
SCALE		DRN DATE		DWG NO.	
1:1		11, 2021		NV60VS04-S	

HIFLUX®

REV NO.	DESCRIPTION	DRAWING	REVIEWRED BY	APPROVED BY
0	FOR APPROVAL			
		DESIGN SECTION		