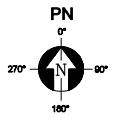

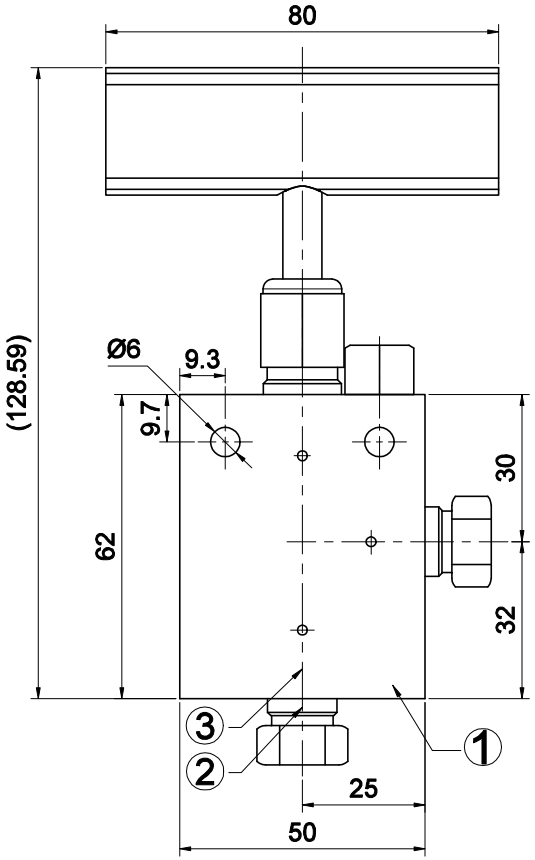

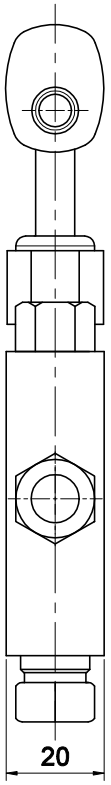

- SPECIFICATIONS

Catalog No.	Pressure Rating(PSI)	Port type	Orifice Size(Ø)	Material
NV20VS06-A	20,000	H2006	5.5	STS316CW

- Note
1. All dimensions for reference only and subject to change.

REV NO.	DESCRIPTION	DRAWING	REVIEWRED BY	APPROVED BY
0	FOR APPROVAL	/		
		DESIGN SECTION		

Website	Main site : http://www.hiflux.com Shopping mall : http://www.hifluxmall.com					
3	COLLAR	20,000PSI 3/8"	FA20RS06	STS316CW	2	EA	-
2	GLAND	20,000PSI 3/8"	FA20GS06	STS316CW	2	EA	-
1	NEEDLE VALVE	20,000PSI 3/8"	NV20VS06-A	-	1	EA	-
ITEM	NAME OF PART	SPEC	Catalog No.	MATERIAL	QUANTITY	UNIT	REMARK
PART CODE		DESCRIPTION			FOR ONE SET		

MATERIAL LIST FOR ONE SET

No indication chamfer 0.2~0.4 X 45°

UNIT: MM

General tolerance is given in KS B ISO 2768-1

NORMINAL DIM.(MM)

OVER	UNDER	TOL.
0.5	6	±0.1
6	30	±0.2
30	120	±0.3
120	315	±0.5
315	1000	±0.8
1000	2000	±1.2
OVER 2000		±1.5

CLASS OF FINISH

- ▽ = 50/, 200S,
- ▽▽ = 12.5/, 50S,
- ▽▽▽ = 3.2/, 12.5S,
- ▽▽▽▽ = 0.8/, 3.2S,
- ▽▽▽▽▽ = 0.2/, 0.8S,

PROJECT: MEDIUM PRESSURE NEEDLE VALVE

TITLE: NEEDLE VALVE ANGLE

20,000PSIG 3/8"

APP'D BY	CH'D BY	DE'D BY	DR'N BY	WORK NO.	REV. NO.
	K.Y.J	K.Y.J	K.Y.J	HI-KYJ-230512-04	0
SCALE 1:1		DR'N DATE 05, 2023		DWG NO. NV20VS06-A	

HIFLUX®