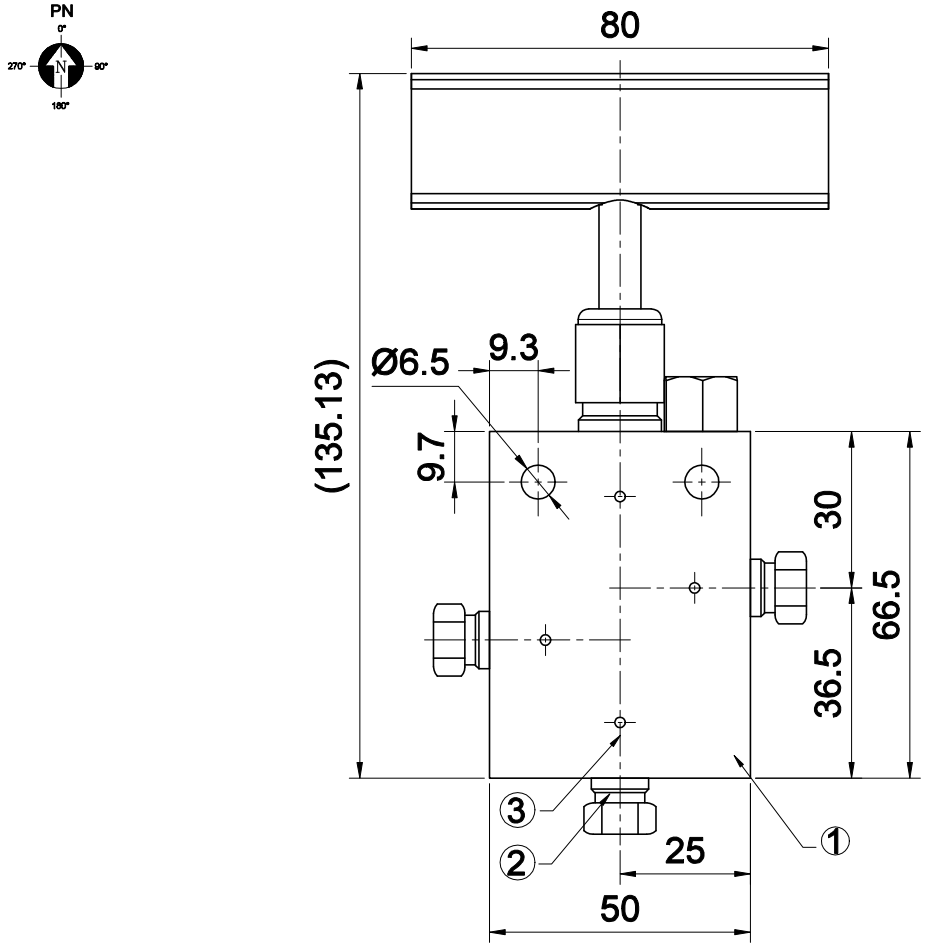

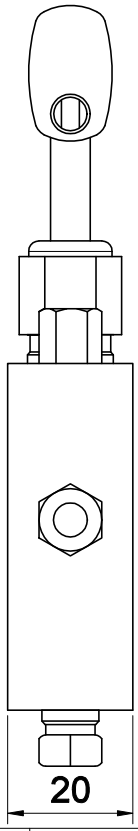

- SPECIFICATIONS

Catalog No.	Pressure Rating(PSI)	Port type	Orifice Size(Ø)	Material
NV20VS04-T	20,000	H2004	3.2	STS16CW

- Note
1. All dimensions for reference only and subject to change.

REV NO.	DESCRIPTION	DRAWING	REVIEWRED BY	APPROVED BY
0	FOR APPROVAL	/		
		DESIGN SECTION		

Website	Main site : http://www.hiflux.com Shopping mall : http://www.hifluxmall.com					
3	COLLAR	20,000PSI 1/4"	FA20RS04	STS316CW	3	EA	-
2	GLAND	20,000PSI 1/4"	FA20GS04	STS316CW	3	EA	-
1	NEEDLE VALVE	20,000PSI 1/4"	NV20VS04-T	-	1	EA	-
ITEM	NAME OF PART	SPEC	Catalog No.	MATERIAL	QUANTITY	UNIT	REMARK
PART CODE		DESCRIPTION			FOR ONE SET		

MATERIAL LIST FOR ONE SET

No indication chamfer 0.2~0.4 X 45°

General tolerance is given in KS B ISO 2768-1

NORMINAL DIM.(MM)		
OVER	UNDER	TOL.
0.5	6	±0.1
6	30	±0.2
30	120	±0.3
120	315	±0.5
315	1000	±0.8
1000	2000	±1.2
OVER 2000		±1.5

UNIT: MM

CLASS OF FINISH

▽ = 50/	, 200S,	~
▽ = 12.5/	, 50S,	▽
▽ = 3.2/	,12.5S,	▽▽
▽ = 0.8/	, 3.2S,	▽▽▽
▽ = 0.2/	, 0.8S,	▽▽▽▽

PROJECT: MEDIUM PRESSURE NEEDLE VALVE

TITLE: NEEDLE VALVE 3WAY 2ON

20,000PSIG 1/4"

APP'D BY	CH'D BY	DE'D BY	DR'N BY	WORK NO.	REV. NO.
	K.Y.J	K.Y.J	K.Y.J	HI-KYS-230525-03	0
SCALE		DR'N DATE		DWG NO.	
1:1		05, 2023		NV20VS04-T	

HIFLUX®